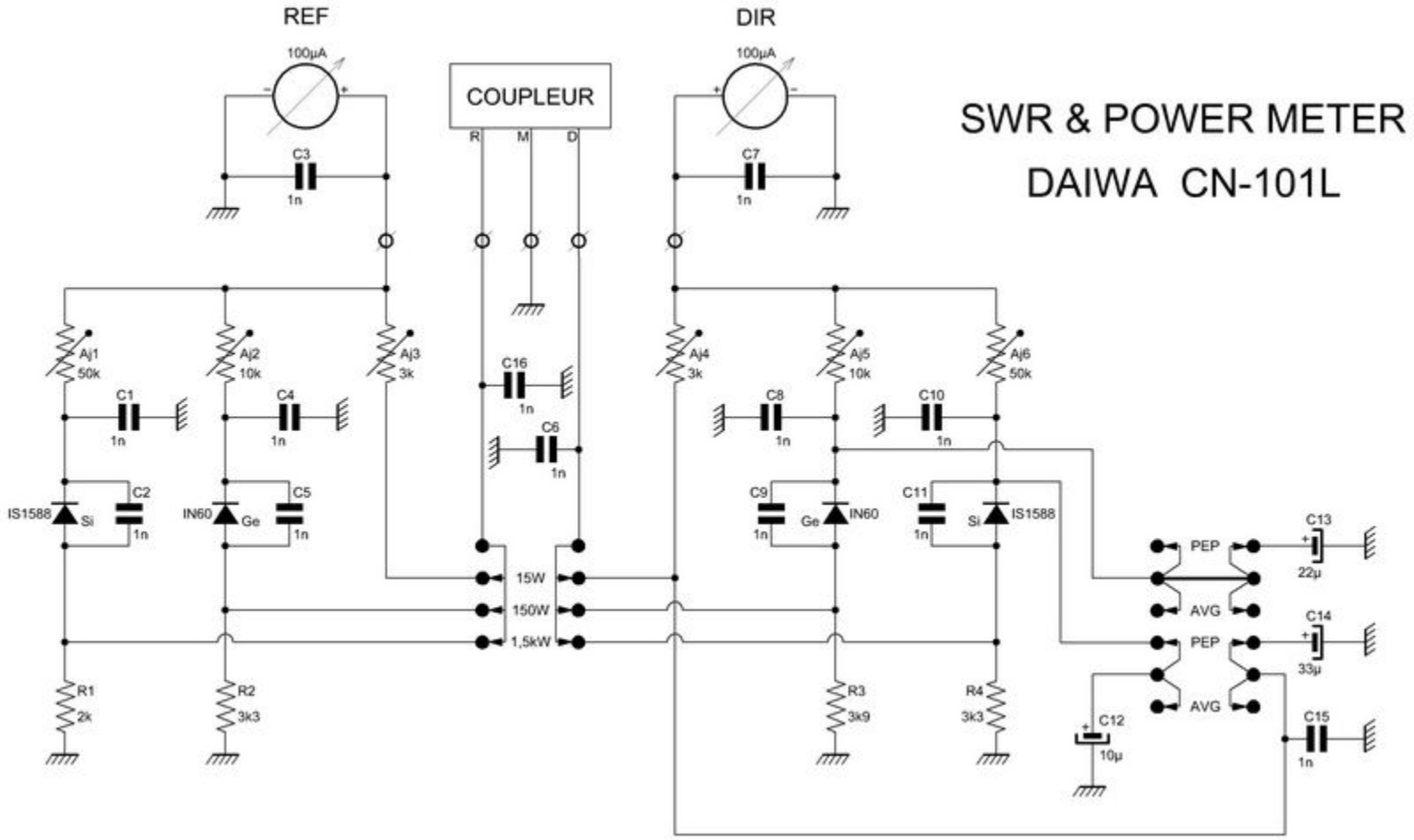
REF
DIR
100µA
100µA
COUPLEUR
R
M
D
SWR & POWER METER
DAIWA CN-101L
C3
1n
C7
1n
Aj1
50k
Aj2
10k
Aj3
3k
Aj4
3k
Aj5
10k
Aj6
50k
C1
1n
C4
1n
C16
1n
C6
1n
C8
1n
C10
1n
IS1588
Si
C2
1n
IN60
Ge
C5
1n
C9
1n
Ge
IN60
C11
1n
Si
IS1588
15W
150W
1,5kW
PEP
AVG
PEP
AVG
C13
22µ
C14
33µ
C15
1n
C12
10µ
R1
2k
R2
3k3
R3
3k9
R4
3k3

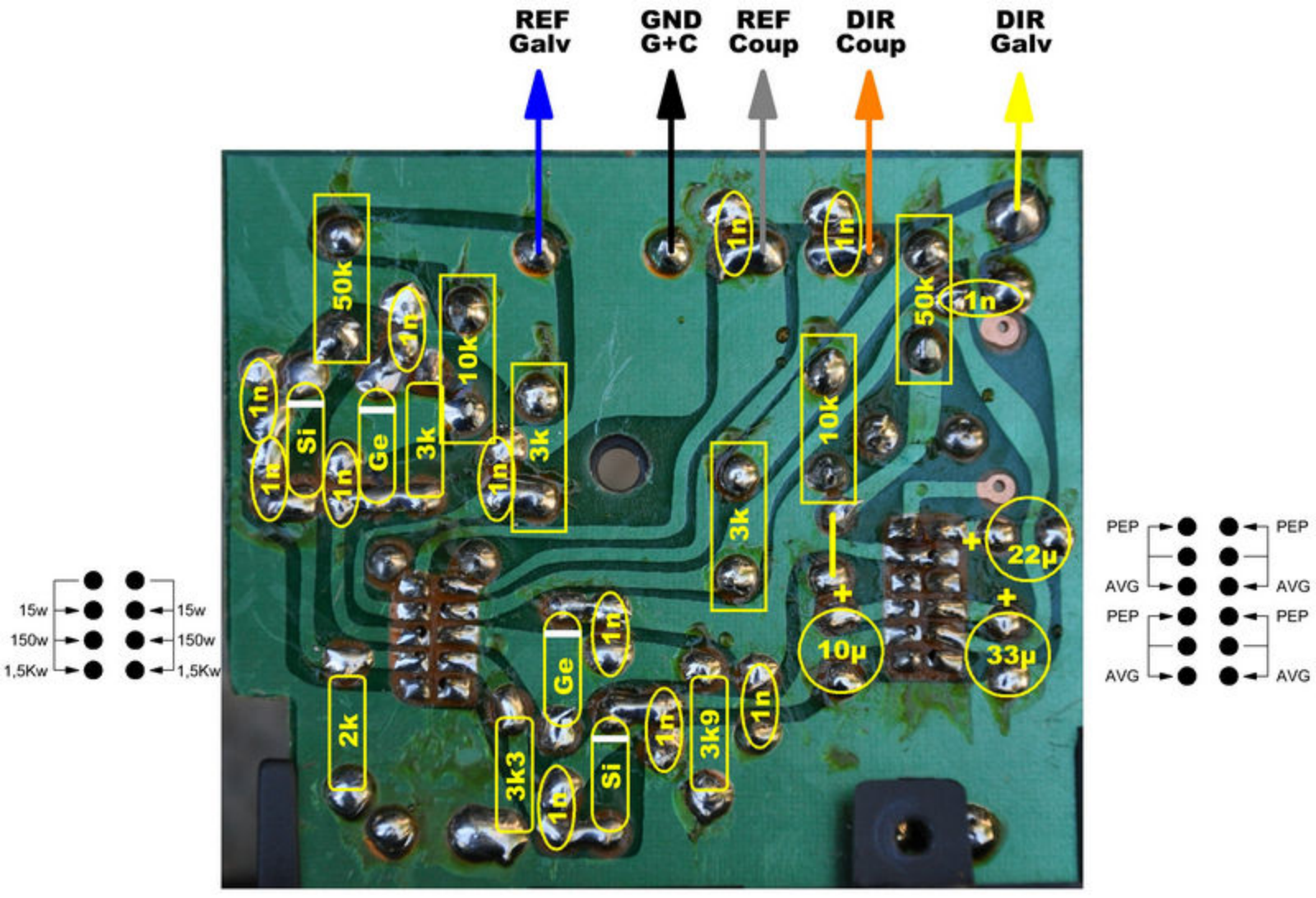
REF Galv
GND G+C
REF Coup
DIR Coup
DIR Galv
50k
1n
10k
3k
Si
Ge
2k
3k3
3k9
10µ
22µ
33µ
15w
150w
1,5Kw
PEP
AVG