scan & edit UN7GET

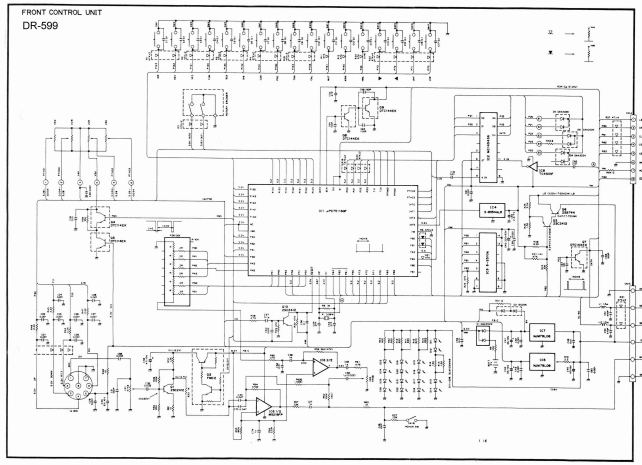

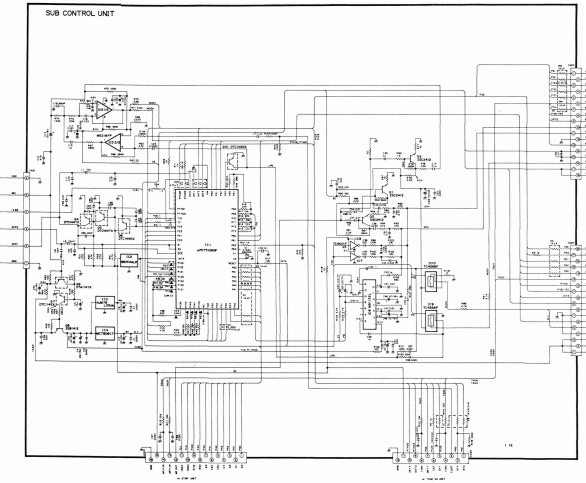

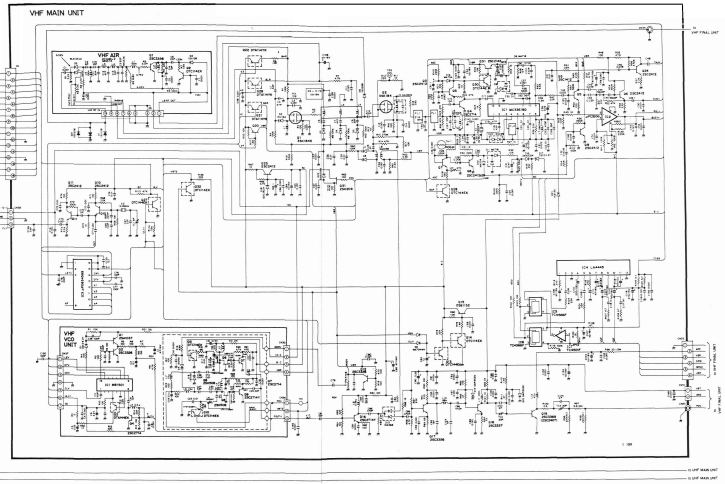

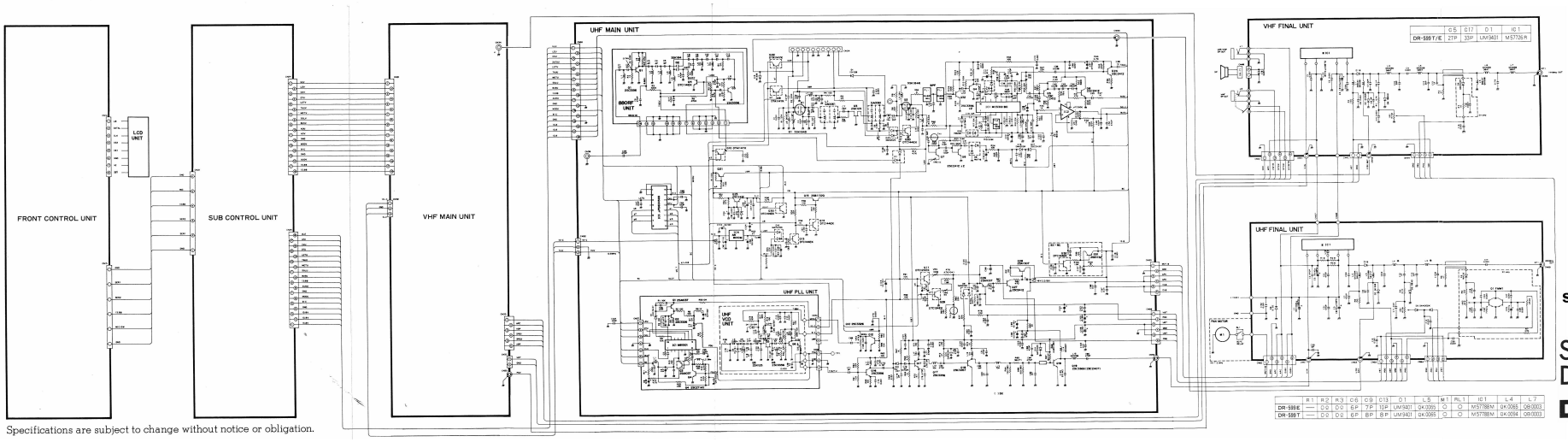

	C5	D17	D1	IC1
DR-599T/E	27P	33P	UM9401	M57726-R

	R1	R2	R3	C6	C9	C13	D1	L5	M1	RL1	IC1	L4	L7
DR-599E	—	D0	D0	6P	7P	9P	UM9401	0K0085	○	○	M57788M	0K0085	QB0003
DR-599T	—	D0	D0	6P	8P	8P	UM9401	0K0085	○	○	M57788M	0K0094	QB0003

Specifications are subject to change without notice or obligation.

scan & edit
UN7GET

SCHEMATIC DIAGRAM

DR-599T/E