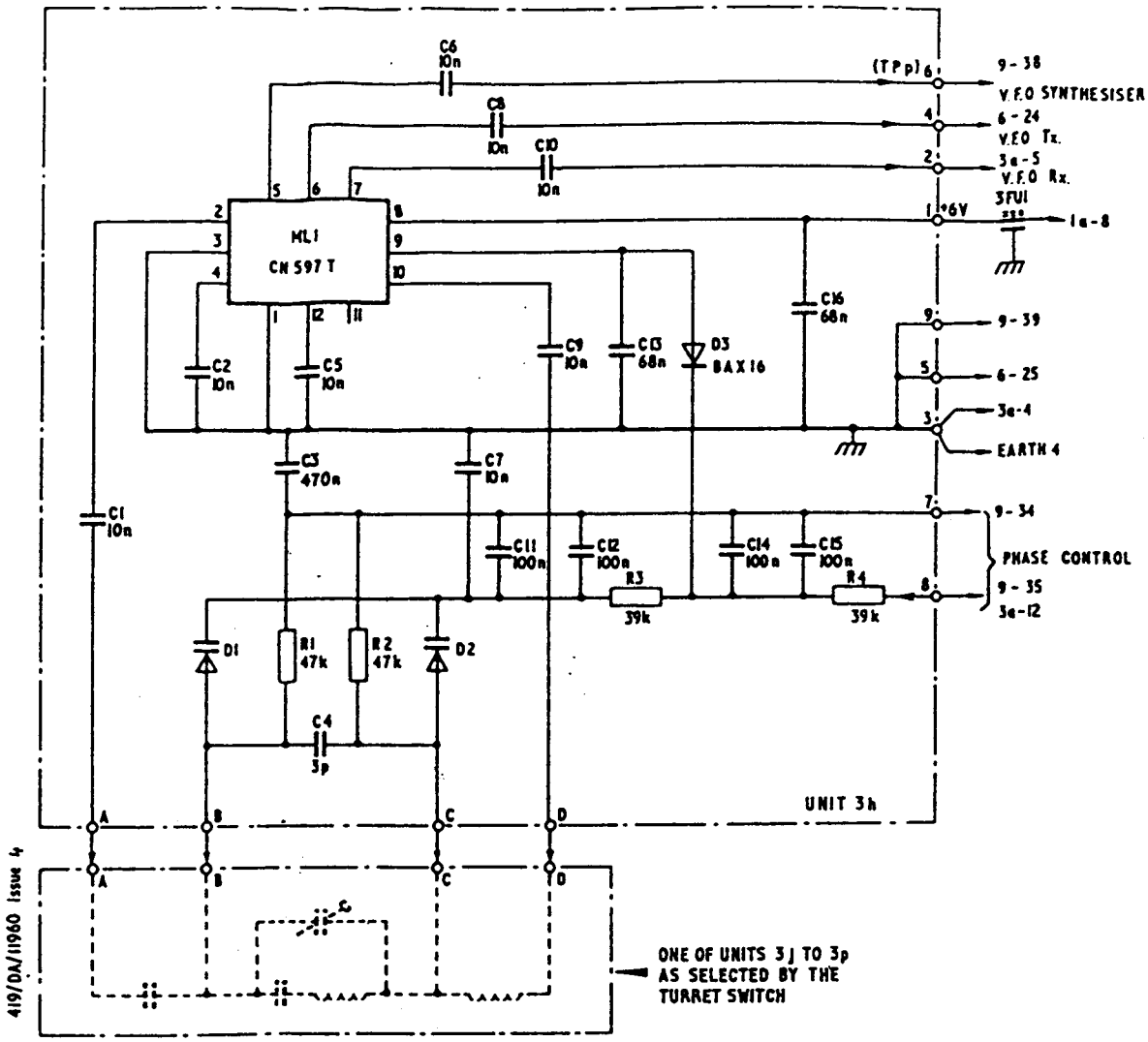
C6 10n
C8 10n
C10 10n
(TPp)
9-38
V.F.O SYNTHESISER
6-24
V.F.O Tx.
3a-5
V.F.O Rx.
3FU1
+6V
1a-8
ML1
CN 597 T
C16 68n
9-39
6-25
3a-4
EARTH 4
C2 10n
C5 10n
C9 10n
C13 68n
D3 BAX16
C3 470n
C7 10n
C1 10n
9-34
C11 100n
C12 100n
C14 100n
C15 100n
R3 39k
R4 39k
PHASE CONTROL
9-35
3a-12
D1
R1 47k
R2 47k
D2
C4 3p
UNIT 3h
A
B
C
D
419/DA/11960 Issue 4
ONE OF UNITS 3J TO 3p AS SELECTED BY THE TURRET SWITCH

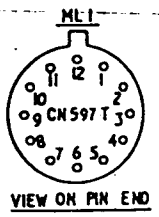
ML1
CN 597 T
VIEW ON PIN END

VFO – circuit