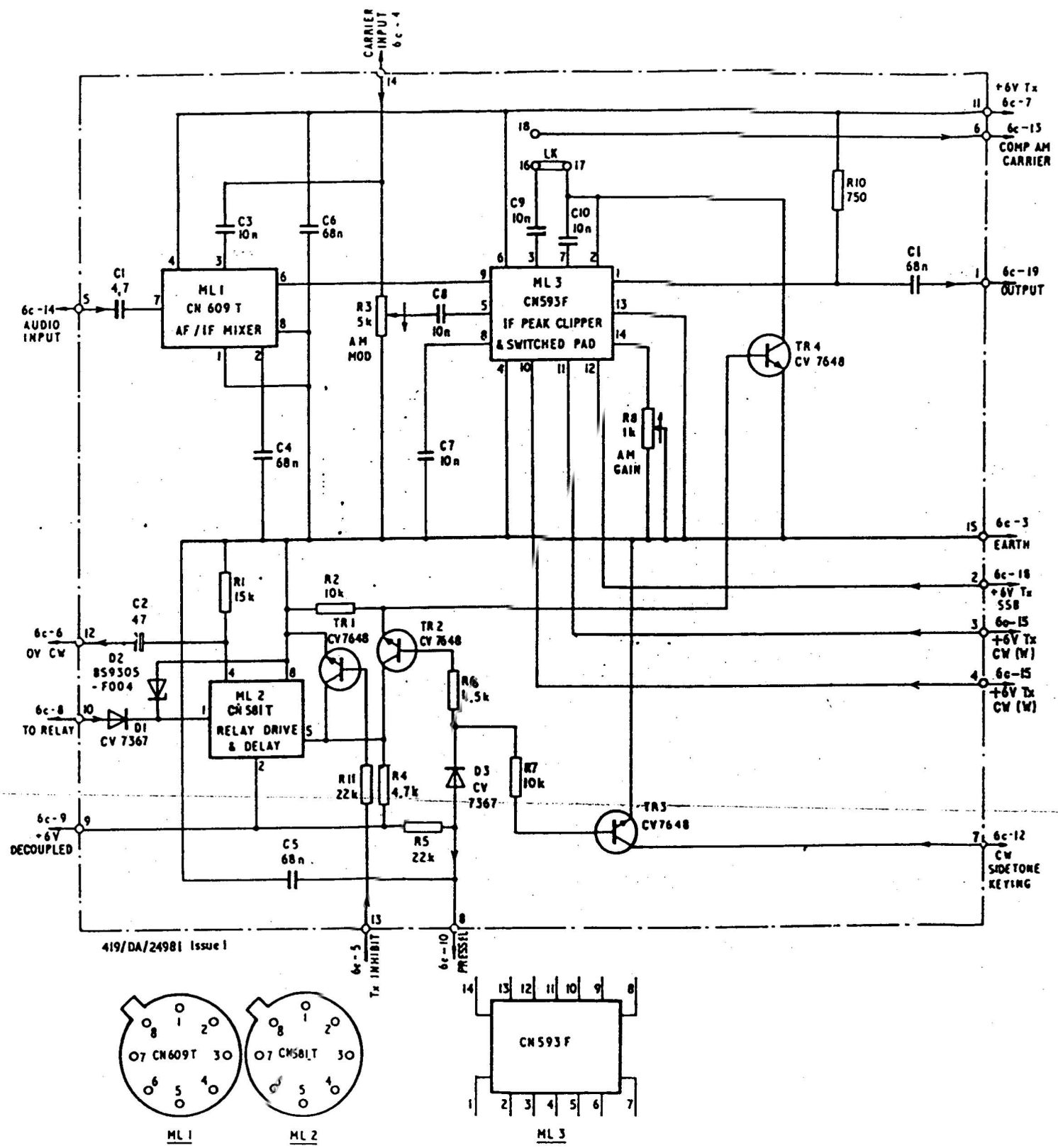

Unit 6d. transmitter AF to IF and relay drive circuit