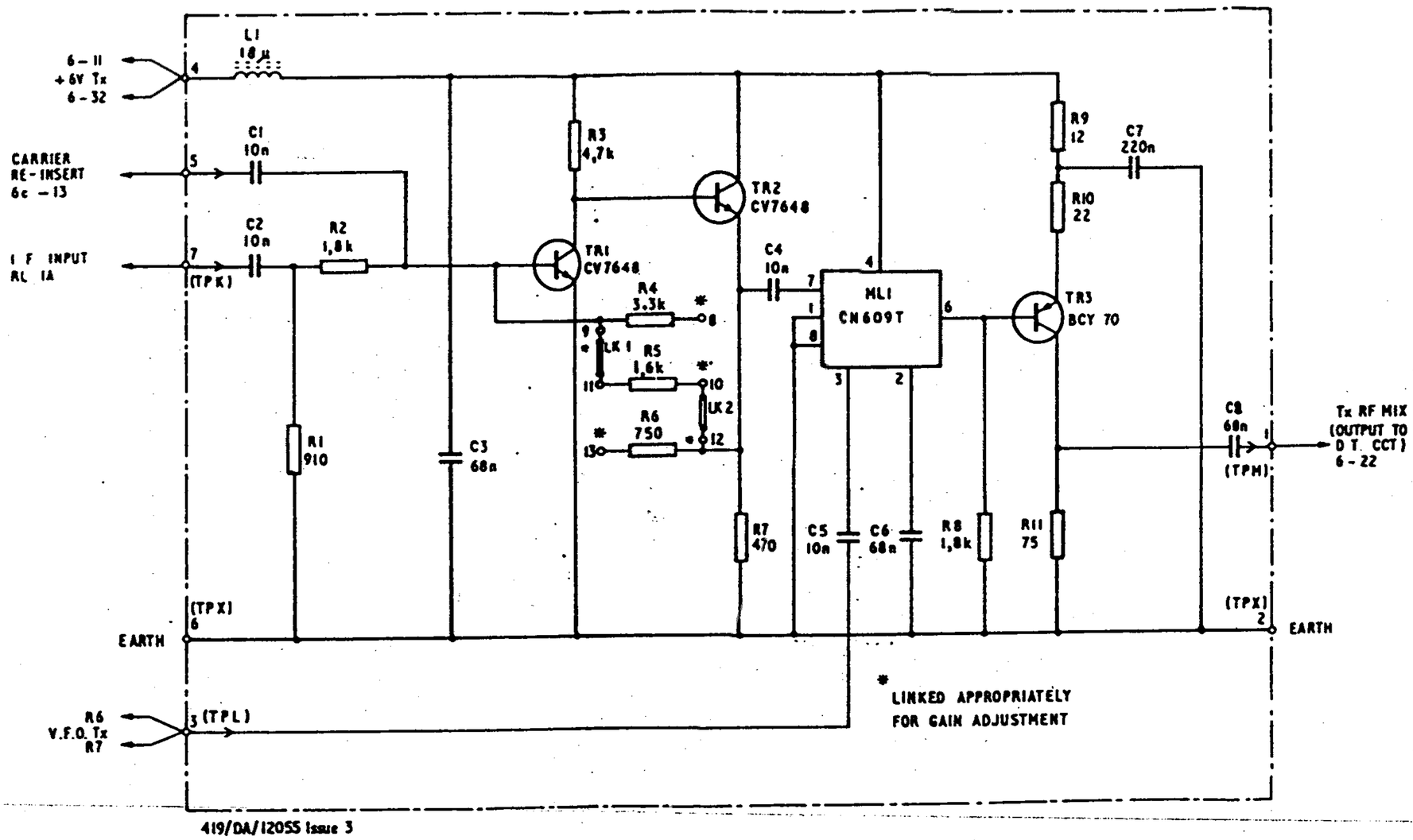

419/DA/12055 Issue 3

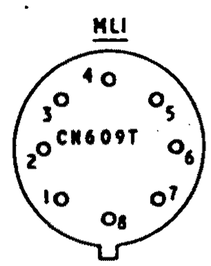

Transmitter IF/RF mixer – circuit