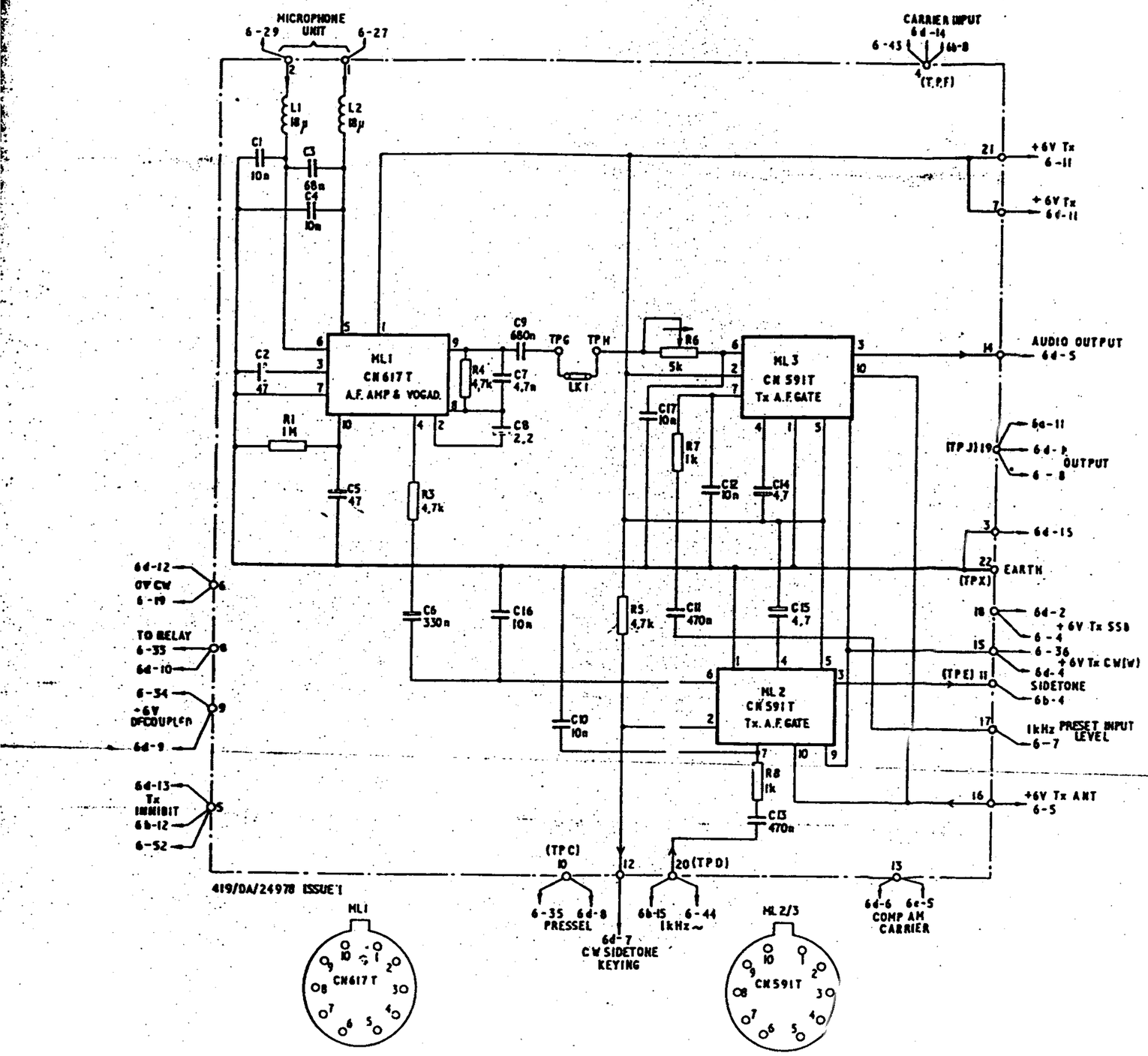

Unit 6c. transmitter AF and gating – circuit

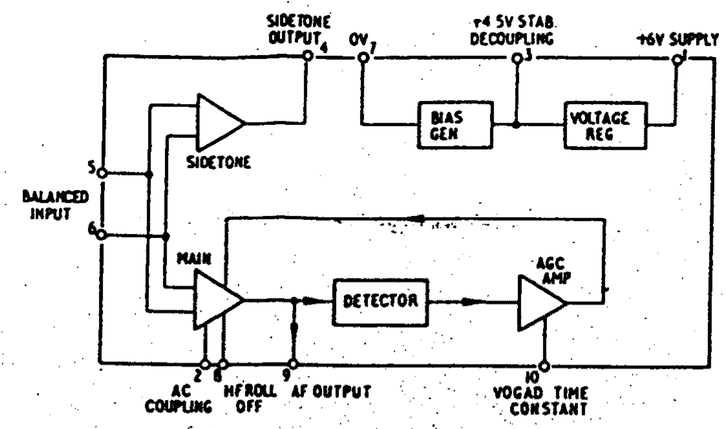

ML1 AF Amp and VOGAD – functional block

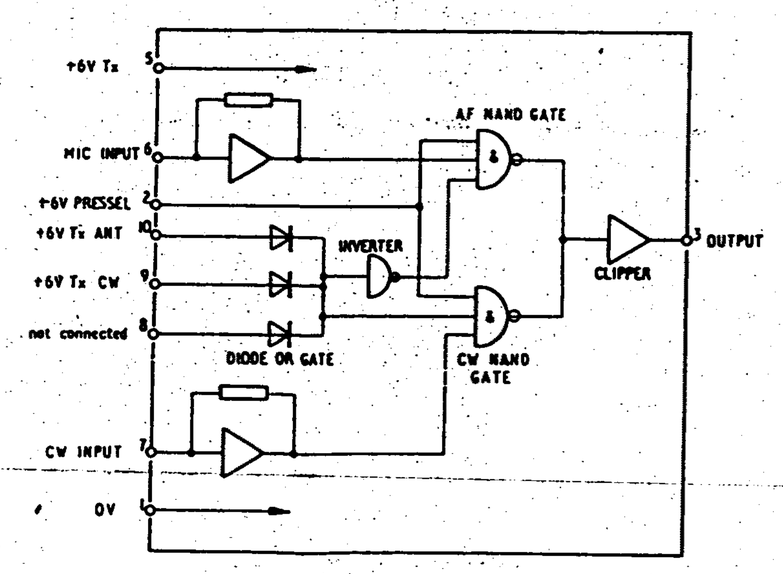

ML2 & ML3 Tx AF Gate – functional block