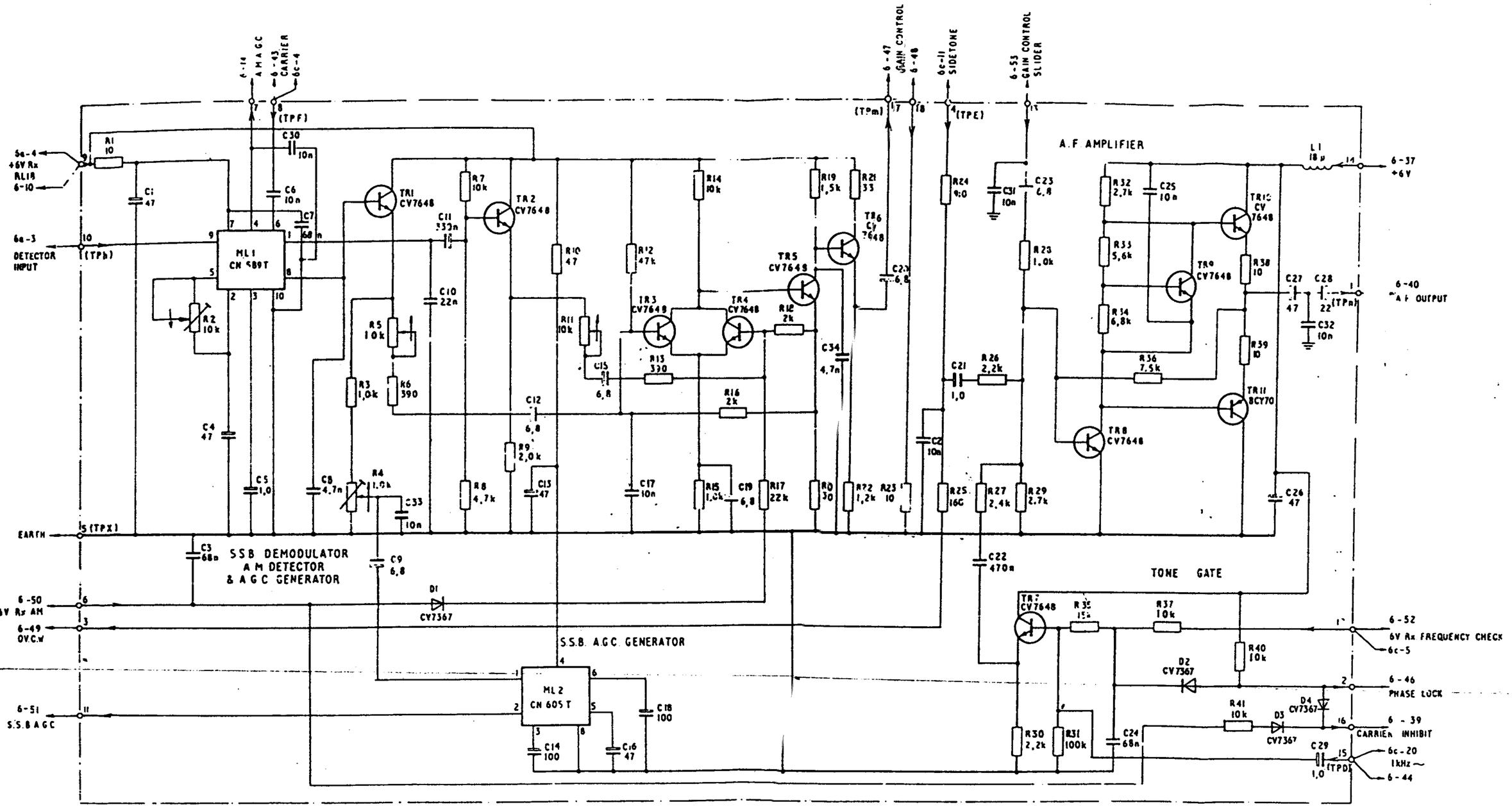

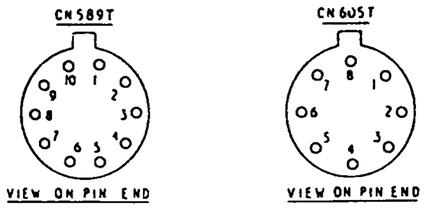

Unit 6b, receiver demodulator and AF amplifier – circuit

Fig.1