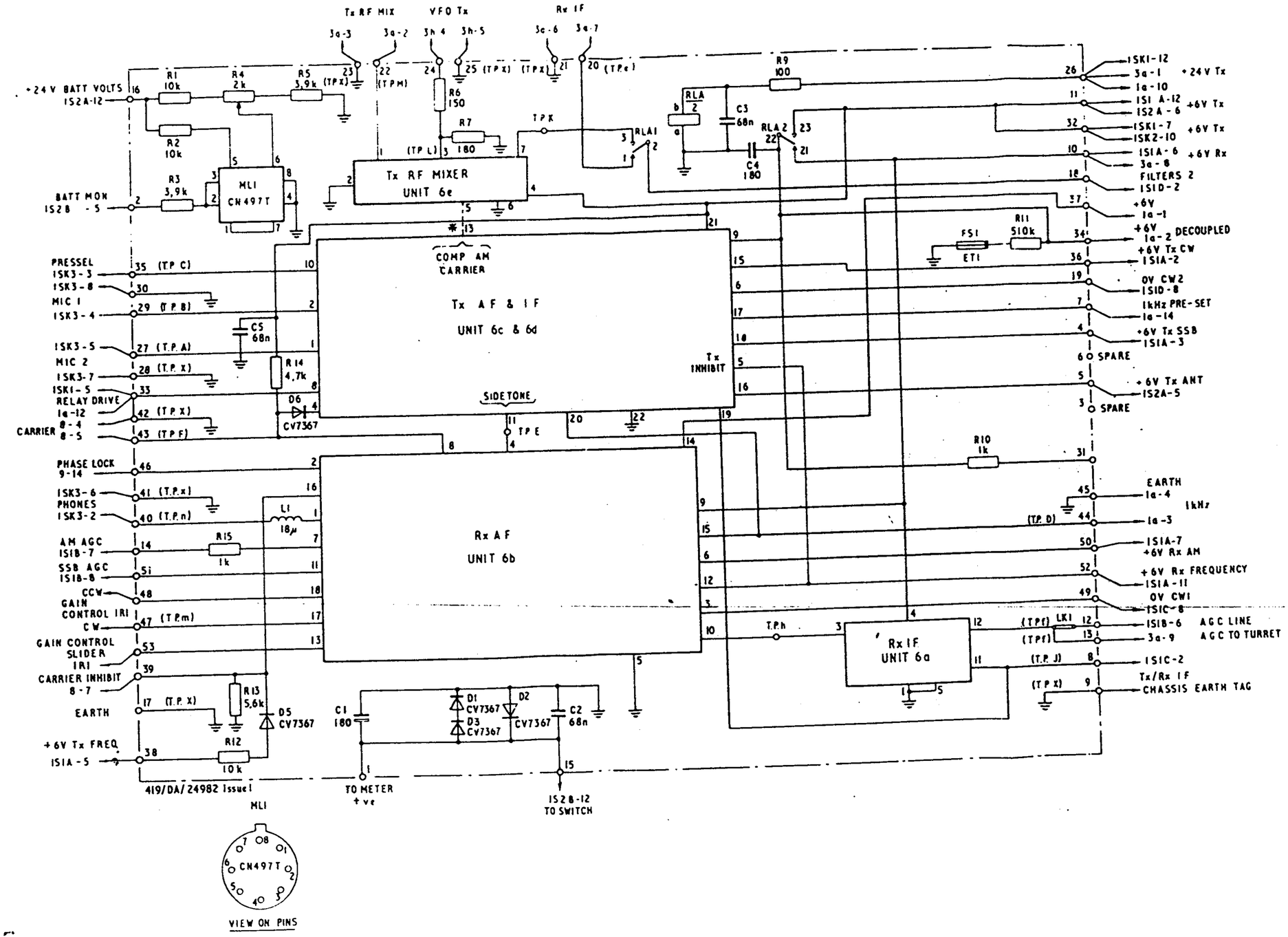

Unit 6, motheer panel and units 6a to 6e – interconnections