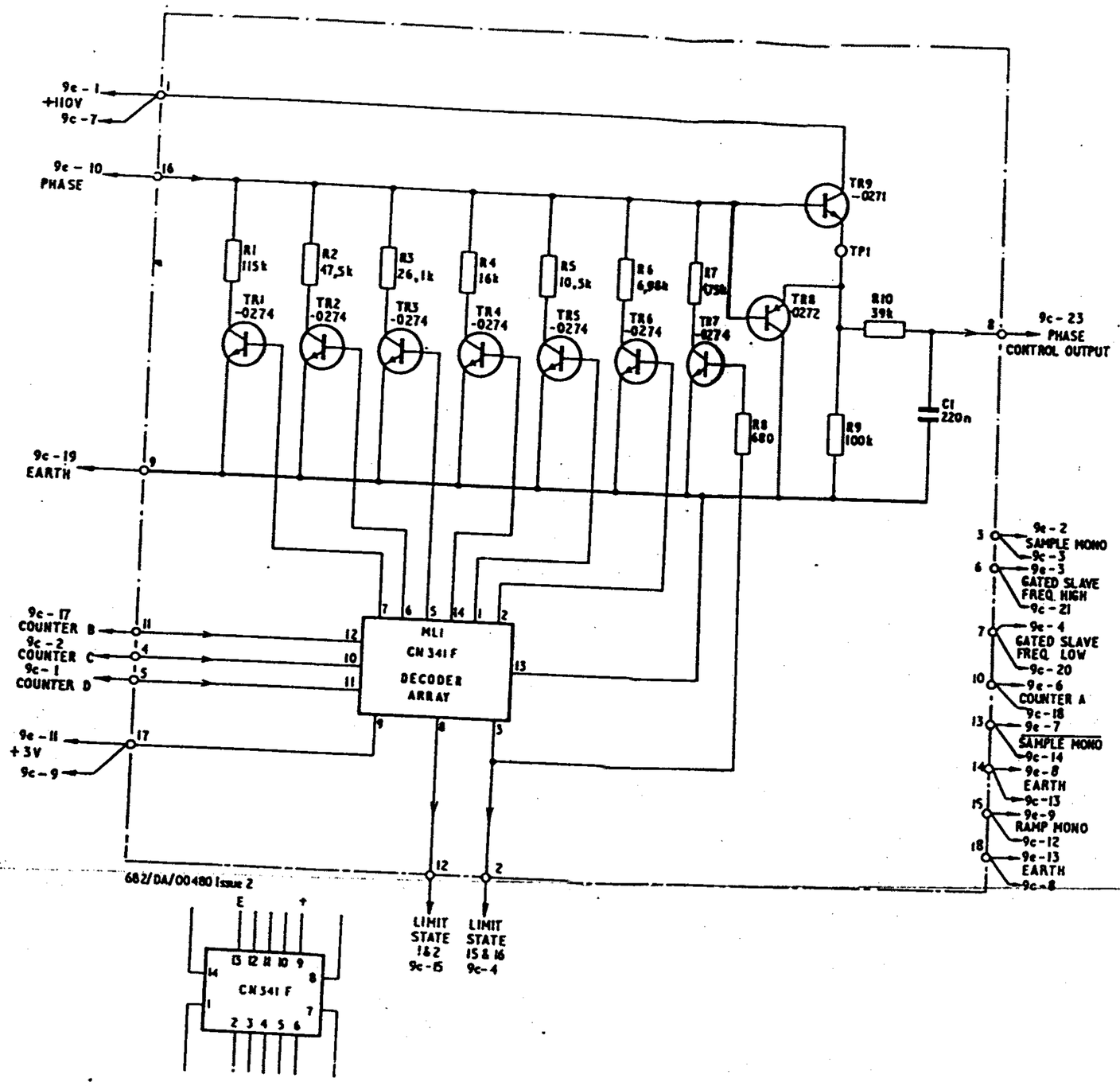

Unit 9d – circuit