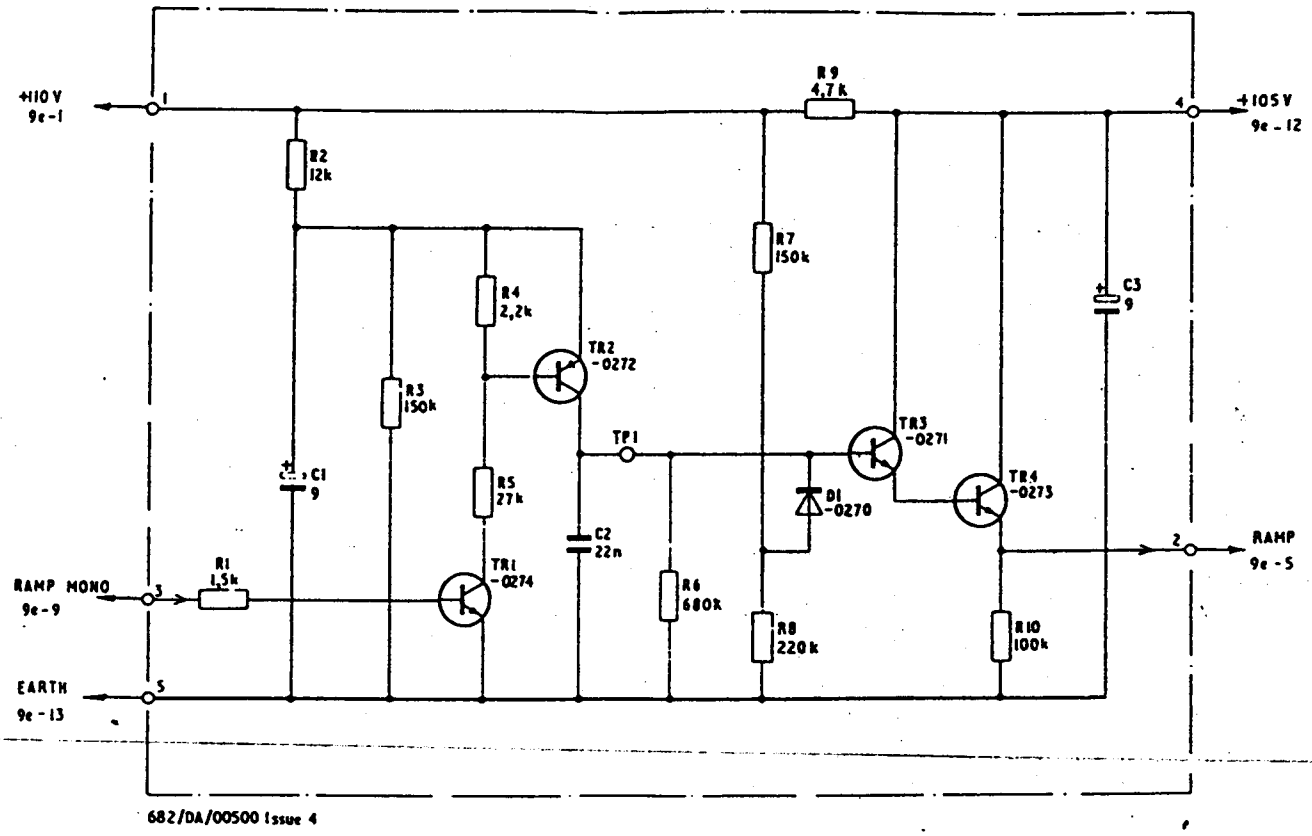

Unit 9f-circuit