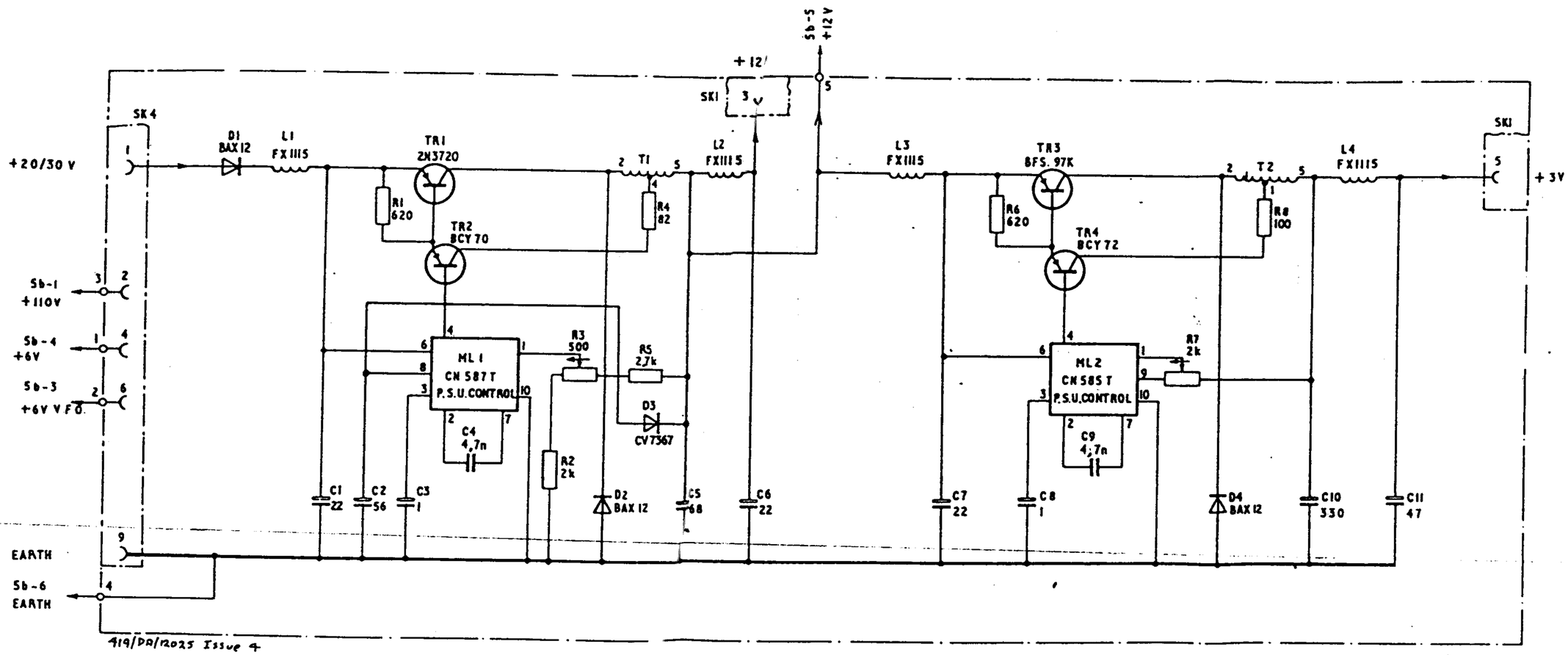

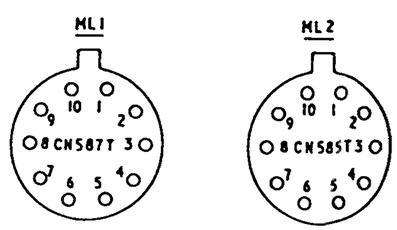

VIEWS ON PIN ENDS

Fig.1
Issue 1

Unit 5a, power supply +12V & +3V — circuit