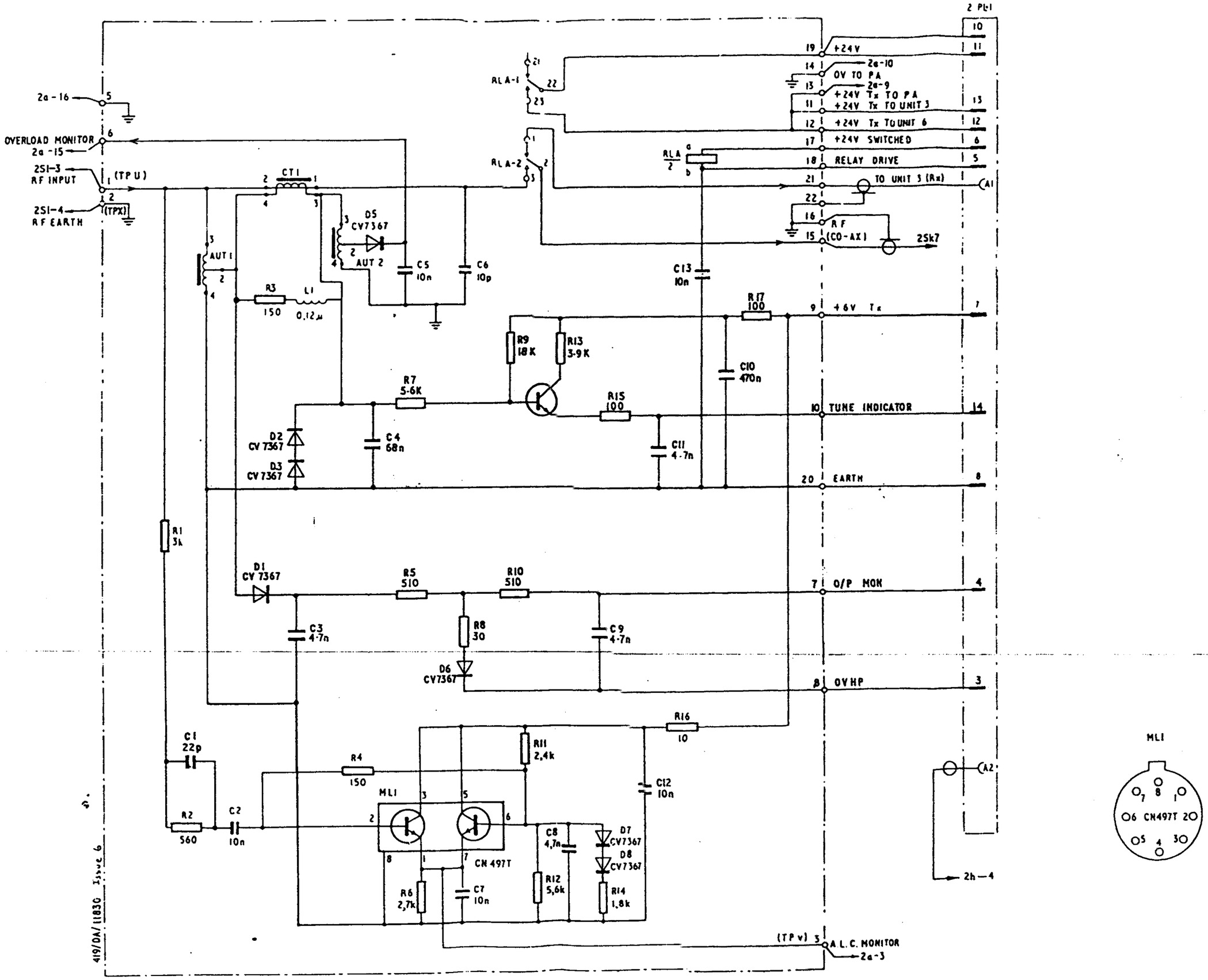

Reflectometer (unit 2b) - circuit