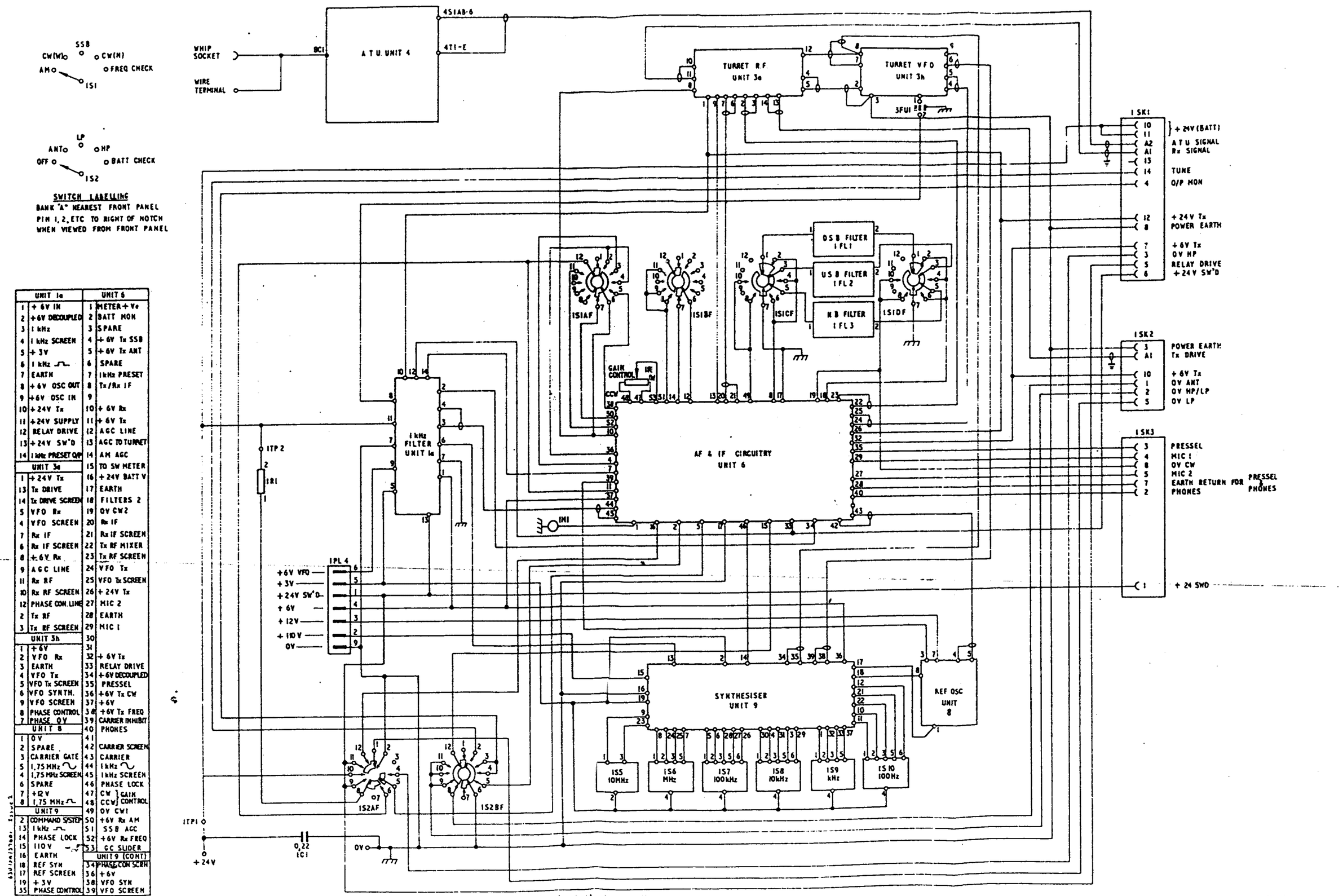

UNIT 1a		UNIT 6	
1	+ 6V IN	1	METER + Ve
2	+6V DECOUPLED	2	BATT MON
3	1 kHz	3	SPARE
4	1 kHz SCREEN	4	+ 6V Tx SSB
5	+ 3V	5	+ 6V Tx ANT
6	1 kHz	6	SPARE
7	EARTH	7	1kHz PRESET
8	+ 6V OSC OUT	8	Tx/Rx IF
9	+6V OSC IN	9	
10	+ 24V Tx	10	+ 6V Rx
11	+ 24V SUPPLY	11	+ 6V Tx
12	RELAY DRIVE	12	AGC LINE
13	+ 24V SW'D	13	AGC TO TURRET
14	1 kHz PRESET O/P	14	AM AGC
UNIT 3a		15	TO SW METER
1	+ 24V Tx	16	+ 24V BATT V
13	Tx DRIVE	17	EARTH
14	Tx DRIVE SCREEN	18	FILTERS 2
5	VFO Rx	19	0V CW2
4	VFO SCREEN	20	Rx IF
7	Rx IF	21	Rx IF SCREEN
6	Rx IF SCREEN	22	Tx RF MIXER
8	+ 6V Rx	23	Tx RF SCREEN
9	AGC LINE	24	VFO Tx
11	Rx RF	25	VFO Tx SCREEN
10	Rx RF SCREEN	26	+ 24V Tx
12	PHASE CON. LINE	27	MIC 2
2	Tx RF	28	EARTH
3	Tx RF SCREEN	29	MIC 1
UNIT 3h		30	
1	+ 6V	31	
2	VFO Rx	32	+ 6V Tx
3	EARTH	33	RELAY DRIVE
4	VFO Tx	34	+6V DECOUPLED
5	VFO Tx SCREEN	35	PRESSEL
6	VFO SYNTH.	36	+6V Tx CW
9	VFO SCREEN	37	+6V
8	PHASE CONTROL	38	+6V Tx FREQ
7	PHASE 0V	39	CARRIER INHIBIT
UNIT 8		40	PHONES
1	0V	41	
2	SPARE	42	CARRIER SCREEN
3	CARRIER GATE	43	CARRIER
5	1.75 MHz	44	1kHz
4	1.75 MHz SCREEN	45	1kHz SCREEN
6	SPARE	46	PHASE LOCK
7	+12 V	47	CW GAIN CONTROL
8	1.75 MHz	48	CCW
UNIT 9		49	0V CW1
2	COMMAND SYSTEM	50	+6V Rx AM
13	1kHz	51	SSB AGC
14	PHASE LOCK	52	+6V Rx FREQ
15	110 V	53	GC SLIDER
16	EARTH	**UNIT 9 (CONT)**	
18	REF SYN	34	PHASE CON SCRN
17	REF SCREEN	36	+ 6V
19	+ 3V	38	VFO SYN
35	PHASE CONTROL	39	VFO SCREEN

Front panel and chassis assembly (unit 1) circuit diagram

Fig.1