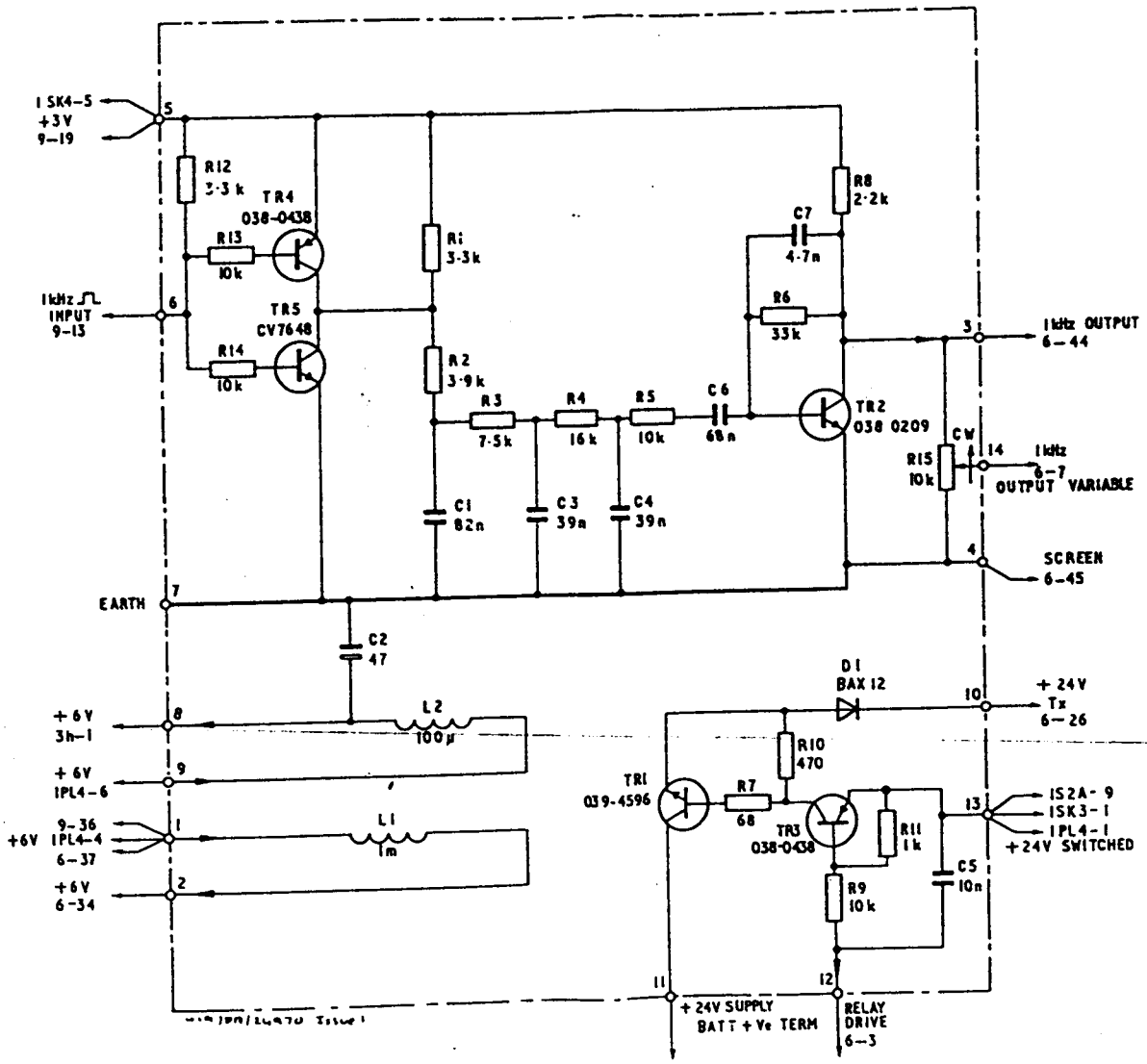

Fig.1 1kHz filter (Unit 1a) circuit diagram