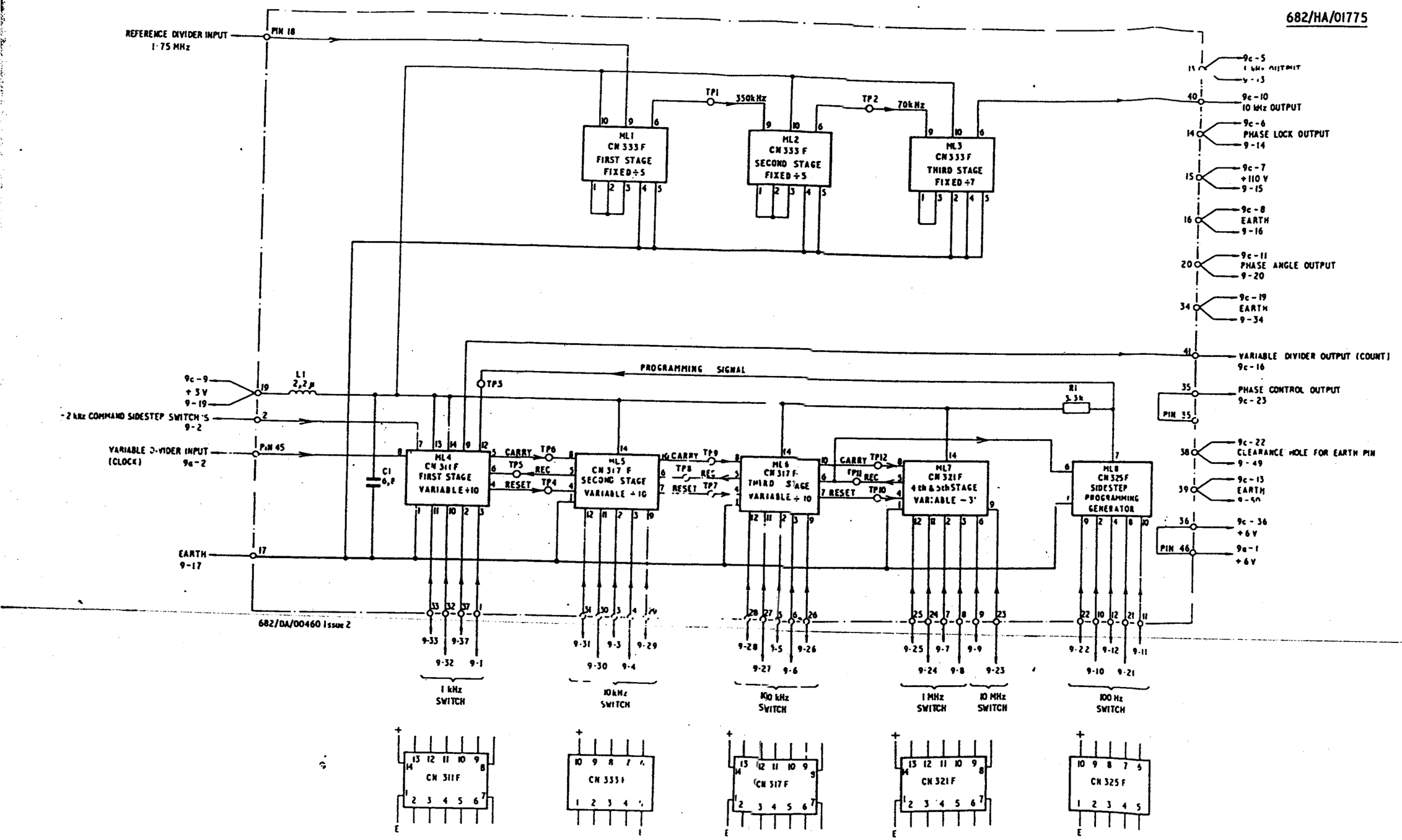

Fig. 3
Issue 1

Unit 9b b-circuit