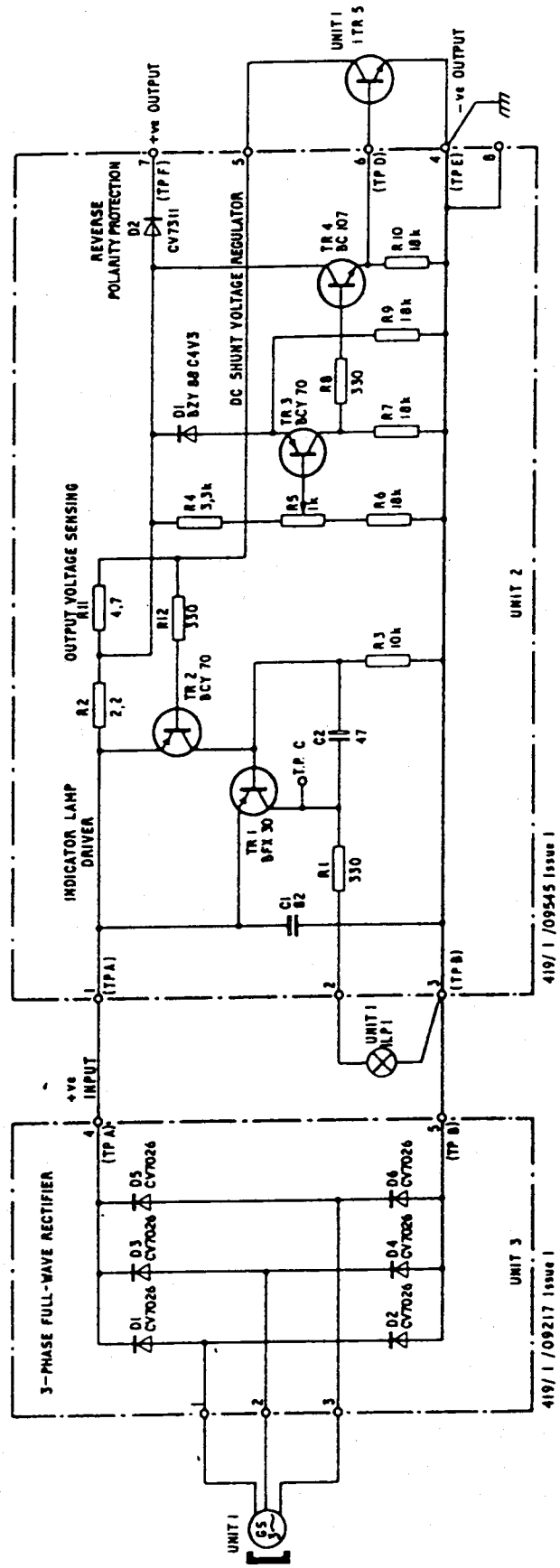

Fig.1 Units 1, 2 and 3 - circuit diagram