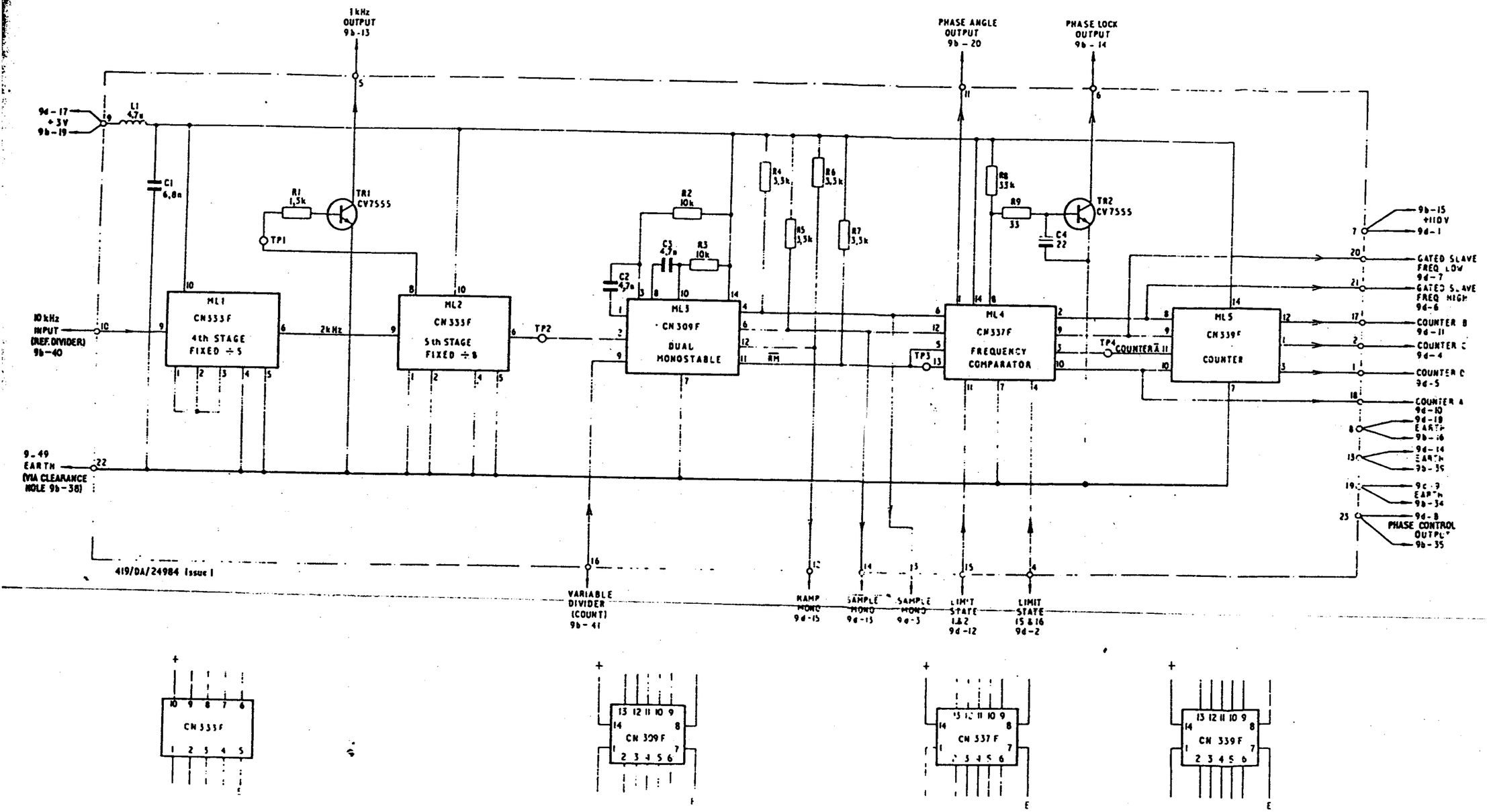

Fig. 4
Issue 1

Unit 9c - circuit