SCHEMATIC DIAGRAM DJ-180

Specifications are subject to change without notice or obligation.

RF UNIT

DJ-180TA2/TB2/C2 version only

Ref. No.	C46	C48	C59	L19
Value	15p	39p	27p	QKA15B

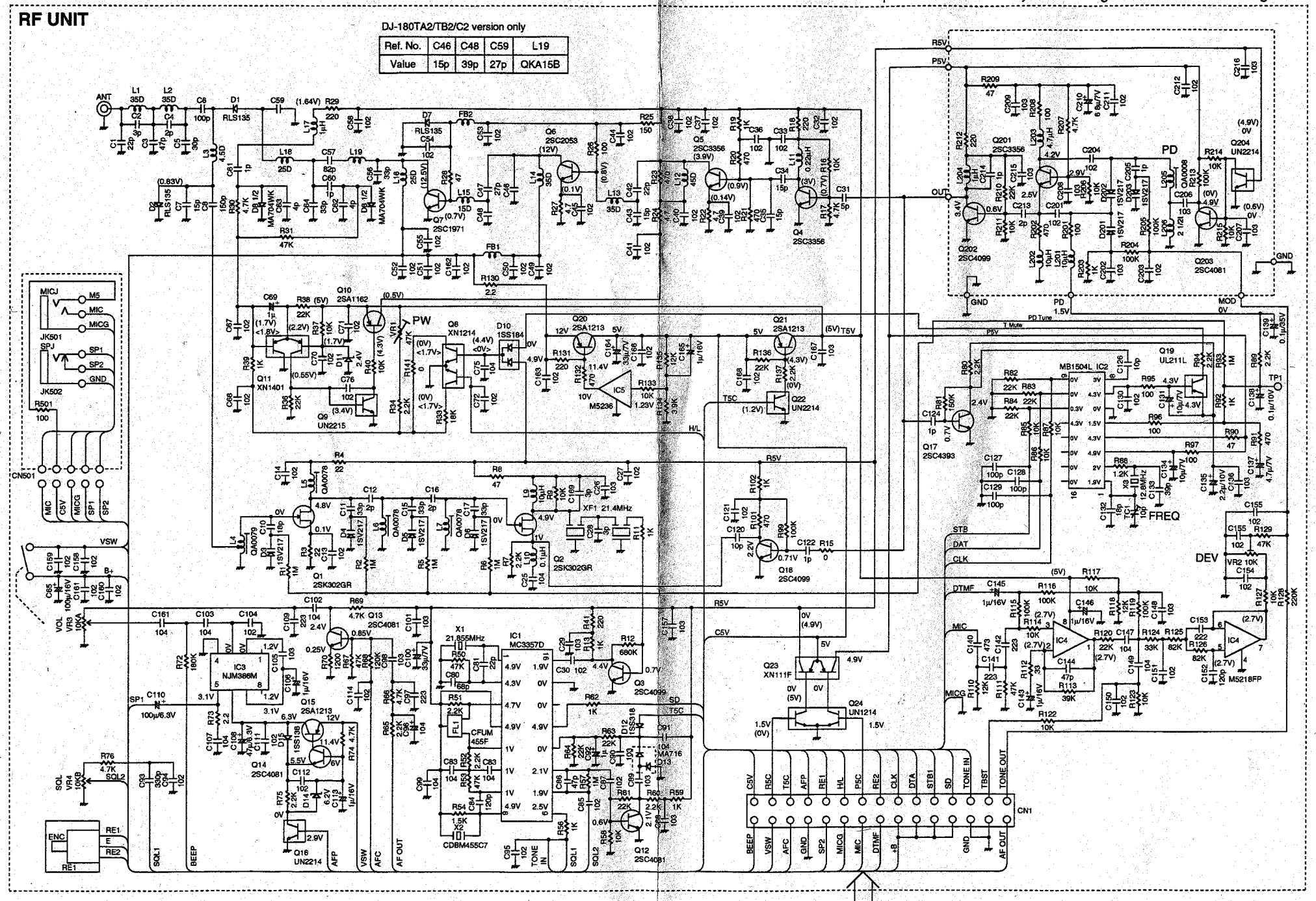
ANT
PW
PD
FREQ
DEV
IC1 MC3357D
IC3 NJM386M
IC4 M5218FP
IC5 M5236
IC2 MB1504L
CN1
CN501
JK501
JK502
XF1 21.4MHz
X1 21.855MHz
X2 CDBM455C7
CFUM 455F
XN1214
XN1401
UN2215
UN2214
UN1214
XN111F
2SC2053
2SC3356
2SC1971
2SA1162
2SA1213
2SC4081
2SC4099
2SC4393
2SK302GR
UL211L
2SC4099
2SC4081
2SC3356
2SC4099
2SC4081
2SC4081
2SC3356
2SC4099
2SC4081
2SC3356
2SC4099
2SC4081
2SC3356
2SC4099

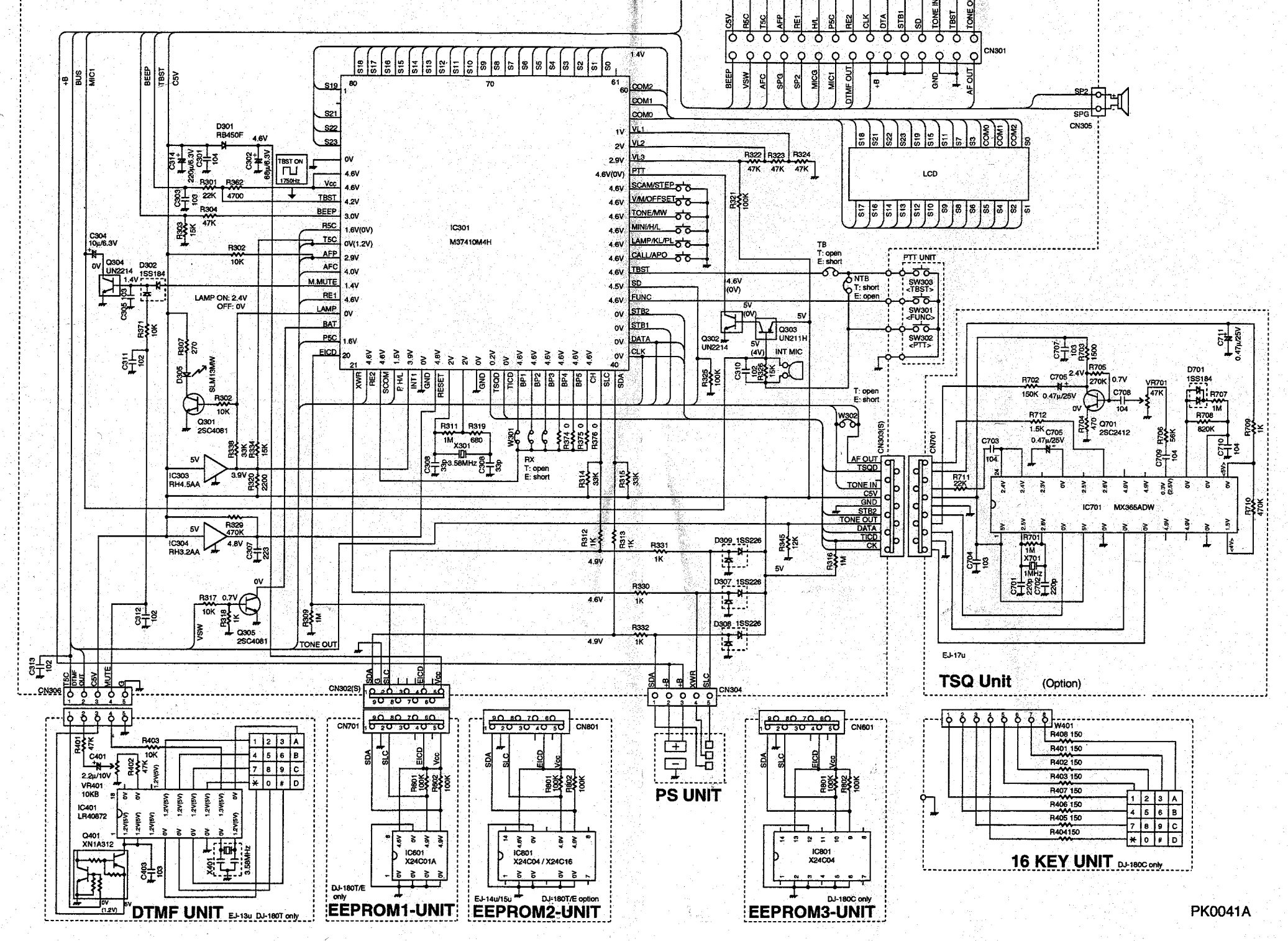
IC301
M37410M4H
CN301
CN305
LCD
PTT UNIT
SW303 <TBST>
SW301 <FUNC>
SW302 <PTT>
Q303 UN211H
INT MIC
Q302 UN2214
Q304 UN2214
Q301 2SC4081
Q305 2SC4081
IC303 RH4.5AA
IC304 RH3.2AA
D301 RB450F
D302 1SS184
D305 SLM13MW
LAMP ON: 2.4V
OFF: 0V
TBST ON
1750Hz
X301 3.58MHz
CN303(S)
CN701
IC701 MX365ADW
Q701 2SC2412
EJ-17u
TSQ Unit (Option)
CN306
CN302(S)
CN304
CN801
CN601
PS UNIT
W401
R408 150
R401 150
R402 150
R403 150
R407 150
R406 150
R405 150
R404150
16 KEY UNIT DJ-180C only
DTMF UNIT EJ-13u DJ-180T only
IC401 LR40672
Q401 XN1A312
X401 3.58MHz
EEPROM1-UNIT
IC601 X24C01A
DJ-180T/E only
EEPROM2-UNIT
IC801 X24C04 / X24C16
EJ-14u/15u
DJ-180T/E option
EEPROM3-UNIT
IC801 X24C04
DJ-180C only
PK0041A